niftylift

ПОДЪЕМНАЯ ТЕХНИКА NIFTYLIFT

nifty 90

1.70m
5ft 7in

1.50m
4ft 11in

3.80m
12ft 6in

595kg
1310lbs

0.75m
2ft 6in

2.10m
6ft 11in

120kg
265lbs

0.60m x 0.60m
2ft x 2ft

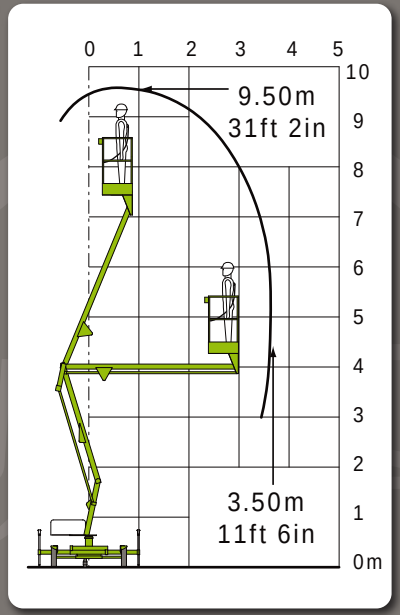

nifty 120

1.90m
6ft 3in

1.50m
4ft 11in

5.50m
18ft

1160kg
2560lbs

1.10m
3ft 7in

2.70m
8ft 10in

200kg
440lbs

1.10m x 0.65m
3ft 7in x 2ft 2in

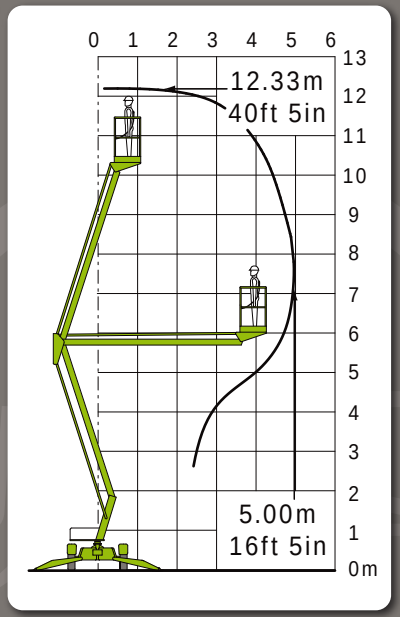

nifty 120T

1.90m
6ft 3in

1.50m
4ft 11in

4.50m
14ft 9in

1400kg
3100lbs

1.10m
3ft 7in

3.55m
11ft 8in

200kg
440lbs

1.10m x 0.65m
3ft 7in x 2ft 2in

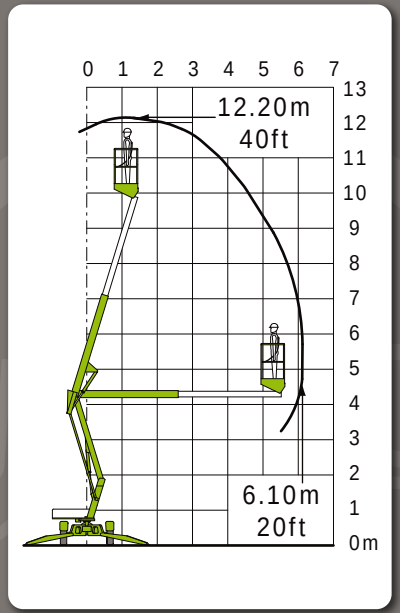

nifty 140

2.00m
6ft 7in

1.60m
5ft 3in

6.75m
22ft 2in

1500kg
3300lbs

150°

3.20m
10ft 6in

225kg
500lbs

1.50m x 0.70m
4ft 11in x 2ft 4in

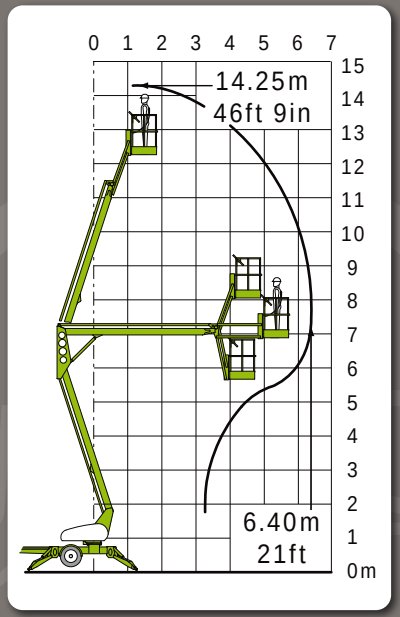

nifty 150T

2.00m
6ft 7in

1.60m
5ft 3in

5.55m
18ft 3in

1725kg
3800lbs

3.80m
12ft 6in

225kg
500lbs

1.40m x 0.70m
4ft 7in x 2ft 4in

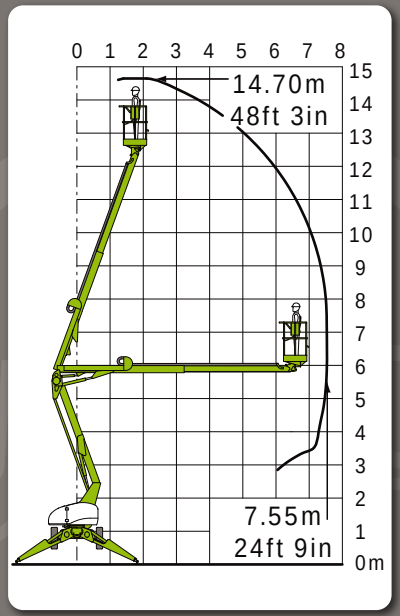

nifty 170

2.15m
7ft

1.65m
5ft 5in

6.20m
20ft 4in

1900kg
4200lbs

4.40m
14ft 5in

200kg
440lbs

1.10m x 0.65m
3ft 7in x 2ft 2in

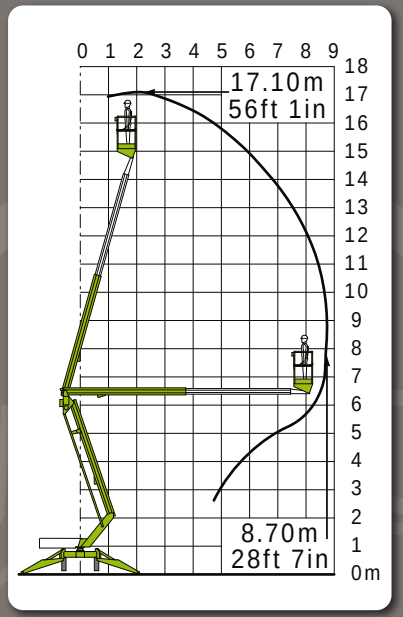

nifty 210

2.27m
7ft 5in

1.80m
5ft 11in

6.95m
22ft 10in

3300kg
7300lbs

4.30m
14ft 1in

225kg
500lbs

1.40m x 0.70m
4ft 7in x 2ft 4in

100°

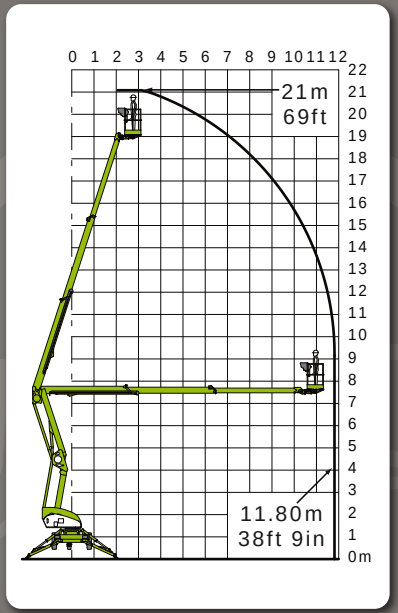

nifty HR10

2.00m
6ft 7in

1.50m
4ft 11in

4.25m
13ft 11in

2130kg
4700lbs

200kg
440lbs

1.10m x 0.65m
3ft 7in x 2ft 2in

3.4kph
2.1mph

25%

4.20m
13ft 9in

P D LPG + -

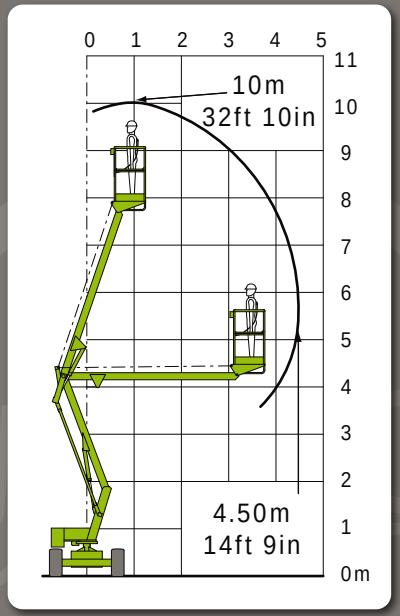

nifty HR12N

1.90m
6ft 3in

1.50m
4ft 11in

4.10m
13ft 5in

3060kg
6750lbs

200kg
440lbs

1.10m x 0.65m
3ft 7in x 2ft 2in

3.4kph
2.1mph

25%

4.20m
13ft 9in

P D LPG + -

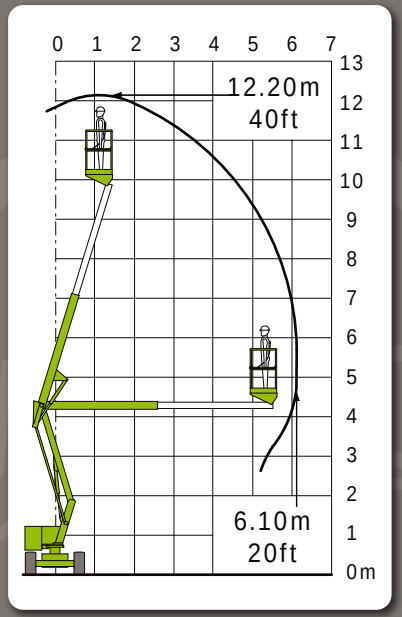

nifty HR12 2x4

1.90m
6ft 3in

1.80m
5ft 11in

4.10m
13ft 5in

2630kg
5800lbs

200kg
440lbs

1.10m x 0.65m
3ft 7in x 2ft 2in

3.4kph
2.1mph

25%

4.20m
13ft 9in

P D LPG + -

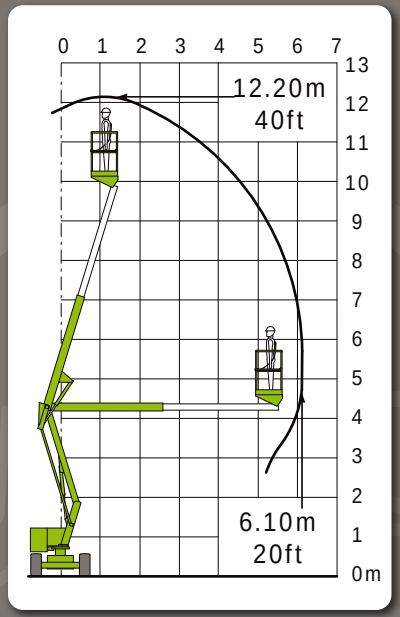

nifty HR12 4x4

1.95m
6ft 5in

1.60m
5ft 3in

4.10m
13ft 5in

3330kg
7350lbs

200kg
440lbs

1.10m x 0.65m
3ft 7in x 2ft 2in

3.7kph
2.2mph

30%

3.40m
11ft 2in

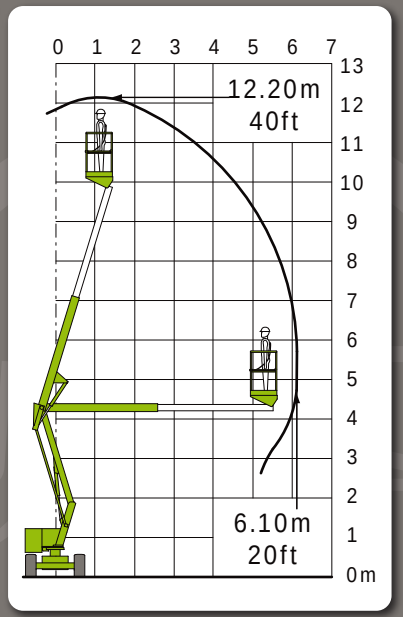

nifty HR15N

2.10m 6ft 11in	1.50m 4ft 11in	6.30m 20ft 8in
6680kg 14700lbs	150°	5.00m 16ft 5in
225kg 500lbs	1.50m x 0.70m 4ft 11in x 2ft 4in	
4.0kph 2.5mph	25%	4.40m 14ft 5in
D LPG + -		100°

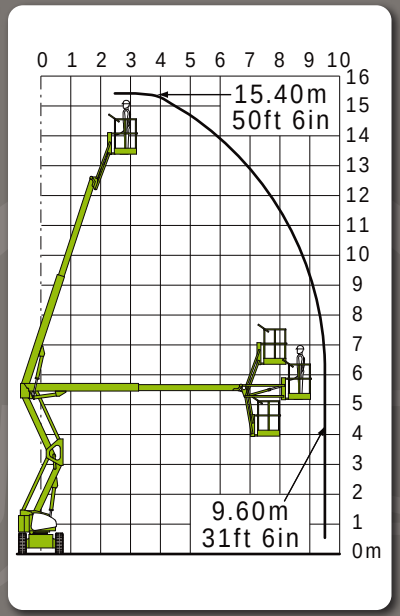

nifty HR15 4x4

2.18m
7ft 2in

2.00m
6ft 7in

6.50m
21ft 4in

6400kg
14110lbs

150°

5.00m
16ft 5in

225kg
500lbs

1.80m x 0.70m
5ft 11in x 2ft 4in

6.6kph
4.1mph

45%

5.10m
16ft 9in

D

180°

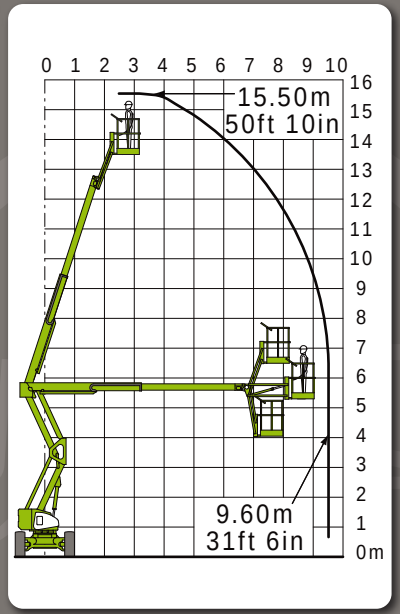

nifty HR17N

- 2.10m / 6ft 11in
- 1.50m / 4ft 11in
- 6.30m / 20ft 8in
- 7200kg / 15900lbs
- 150°
- 5.00m / 16ft 5in
- 225kg / 500lbs
- 1.50m x 0.70m / 4ft 11in x 2ft 4in
- 4.0kph / 2.5mph
- 25%
- 4.40m / 14ft 5in
- D
- LPG
- + -
- 100°

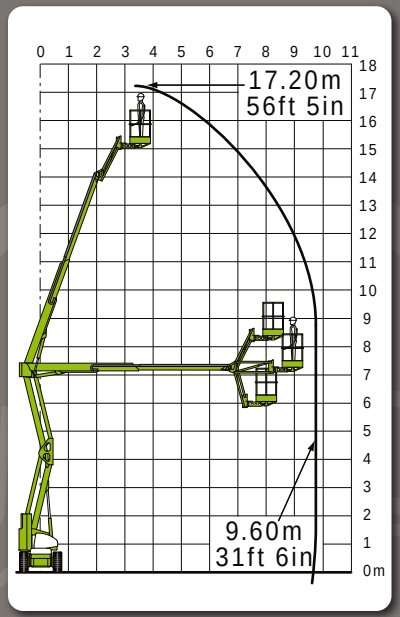

nifty HR17 4x4

2.18m
7ft 2in

2.00m
6ft 7in

6.50m
21ft 4in

6500kg
14330lbs

150°

5.00m
16ft 5in

225kg
500lbs

1.80m x 0.70m
5ft 11in x 2ft 4in

6.6kph
4.1mph

45%

5.10m
16ft 9in

180°

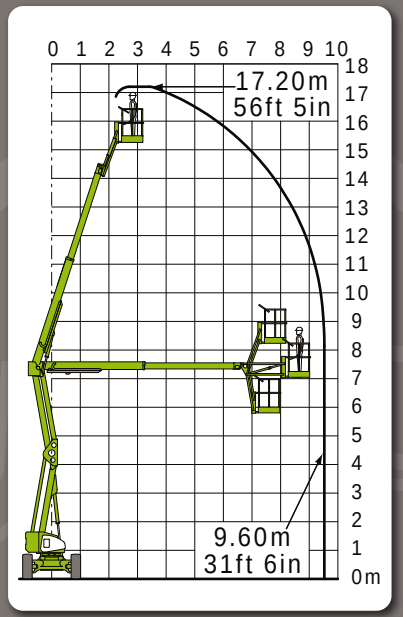

nifty HR17 4x4

2.15m
7ft

2.00m
6ft 7in

6.30m
21ft 4in

4750kg
10500lbs

150°

5.00m
16ft 5in

225kg
500lbs

1.80m x 0.85m
5ft 11in x 2ft 9in

5.5kph
3.4mph

40%

3.70m
12ft 2in

HYBRID

100°

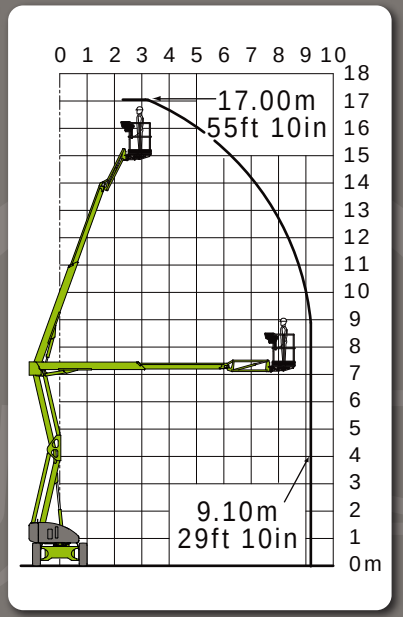

nifty HR18 4x4

2.40m
7ft 10in

2.47m
8ft 1in

7.10m
23ft 4in

6300kg
13900lbs

130°

5.30m
17ft 5in

300kg
661lbs

1.50m x 1.20m
4ft 11in x 3ft 11in

6.6kph
4.1mph

50%

6.00m
19ft 8in

D

180°

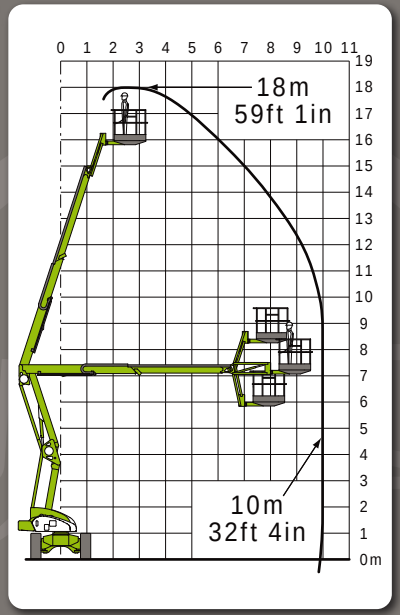

nifty HR21 2x4

2.15m
7ft

2.27m
7ft 5in

6.65m
21ft 10in

6400kg
14110lbs

150°

5.30m
17ft 5in

225kg
500lbs

1.80m x 0.85m
5ft 11in x 2ft 9in

4.5kph
2.8mph

30%

4.00m
13ft

D

+ -

100°

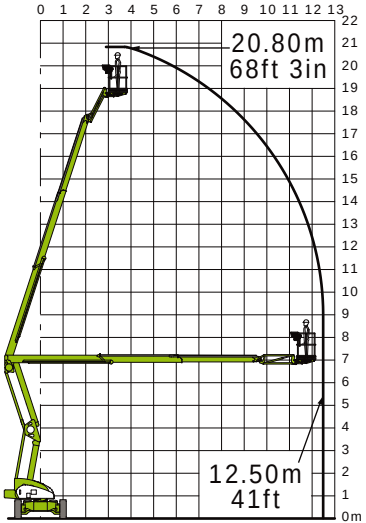

nifty HR21 4x4

2.15m
7ft

2.27m
7ft 5in

6.65m
21ft 10in

6400kg
14110lbs

150°

5.30m
17ft 5in

225kg
500lbs

1.80m x 0.85m
5ft 11in x 2ft 9in

6.6kph
4.1mph

45%

4.00m
13ft

D

100°

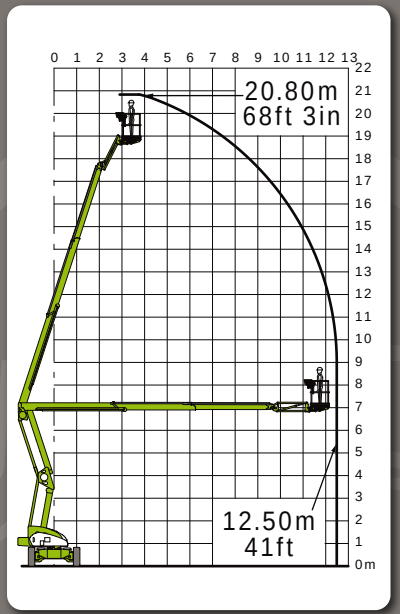

nifty HR21 AWD

2.15m
7ft

2.27m
7ft 5in

6.65m
21ft 10in

6400kg
14110lbs

150°

5.30m
17ft 5in

225kg
500lbs

1.80m x 0.85m
5ft 11in x 2ft 9in

4.5kph
2.8mph

40%

4.00m
13ft

HYBRID

100°

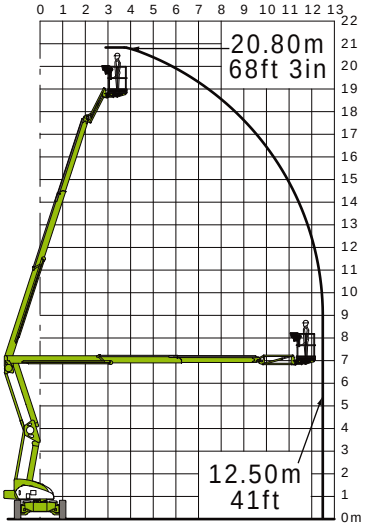

nifty SD120T 4x4

2.00m
6ft 7in

1.60m
5ft 3in

3.90m
12ft 10in

2260kg
4980lbs

3.20m
10ft 6in

200kg
440lbs

1.10m x 0.65m
3ft 7in x 2ft 2in

4.0kph
2.5mph

45%

3.90m
12ft 10in

P D + -

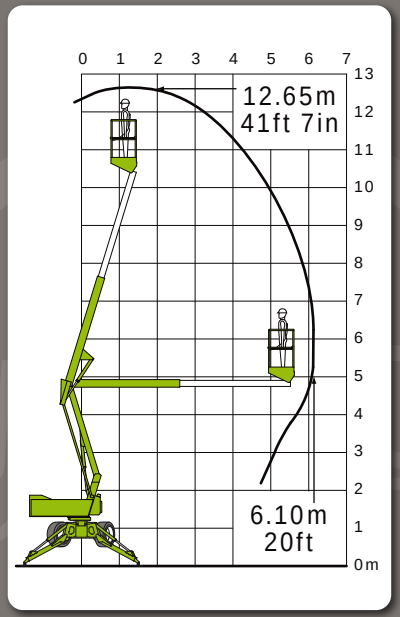

nifty SD170

2.10m
6ft 11in

1.60m
5ft 3in

5.60m
18ft 4in

2750kg
6000lbs

4.40m
14ft 5in

200kg
440lbs

1.10m x 0.65m
3ft 7in x 2ft 2in

5.0kph
3.1mph

25% (2x4)
30% (4x4)

5.20m
17ft

P D + -

100°

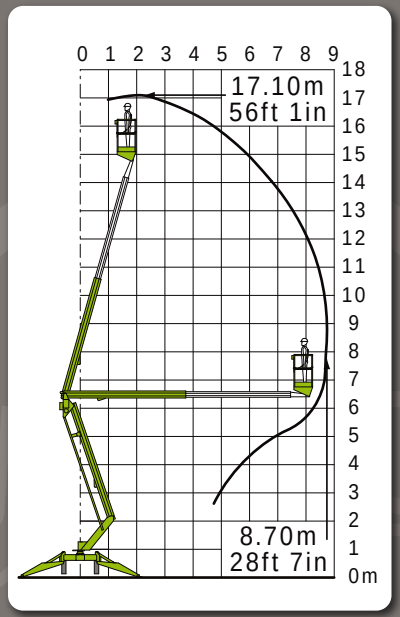

nifty SD210 4x4x4

2.25m
7ft 5in

2.05m
6ft 9in

6.15m
20ft 2in

3950kg
8700lbs

150°

4.20m
13ft 9in

225kg
500lbs

1.50m x 0.70m
4ft 11in x 2ft 4in

7.5kph
4.7mph

45%

3.50m
11ft 6in

D

100°

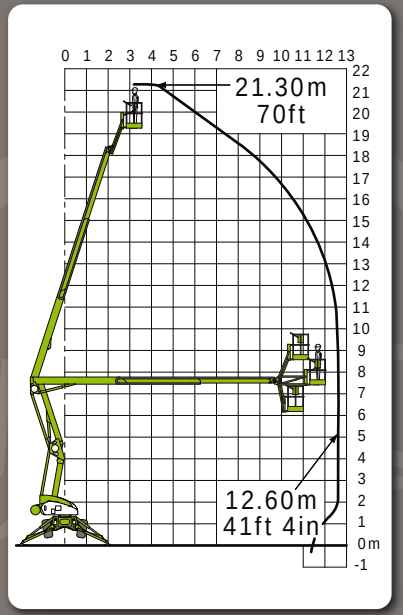

nifty TD120TN

1.90m
6ft 3in

1.15m
3ft 9in

3.95m
13ft

1770kg
3900lbs

0.75m
2ft 6in

3.00m
9ft 10in

120kg
265lbs

0.75m x 0.65m
2ft 6in x 2ft 2in

1.6kph
1.0mph

60%

200kg
440lbs

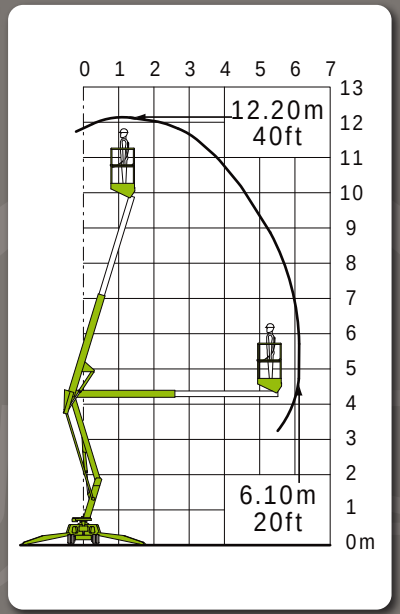

nifty TD120T

1.90m
6ft 3in

1.10m
3ft 7in

3.95m
13ft

1850kg
4100lbs

3.55m
11ft 8in

200kg
440lbs

1.10m x 0.65m
3ft 7in x 2ft 2in

1.6kph
1.0mph

60%

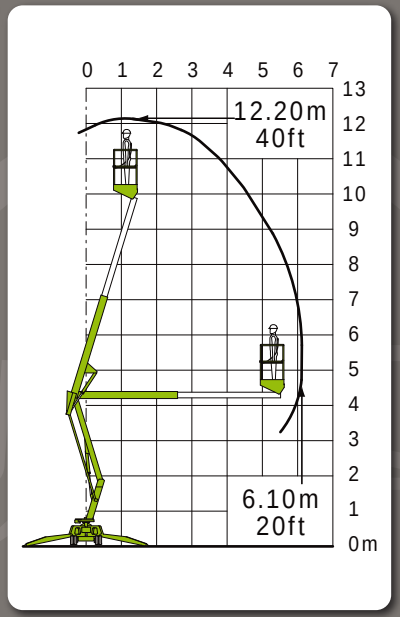

nifty TD150T

2.00m
6ft 7in

1.40m
4ft 7in

4.70m
15ft 5in

2025kg
4500lbs

3.80m
12ft 6in

225kg
500lbs

1.40m x 0.70m
4ft 7in x 2ft 4in

2.1kph
1.3mph

45%

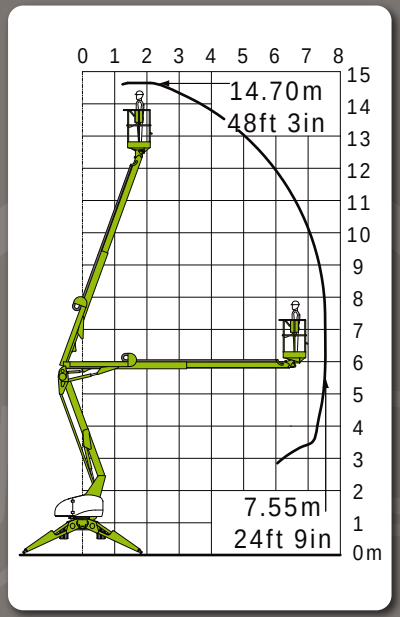

nifty TD170

2.10m
6ft 11in

1.85m
6ft 1in

5.60m
18ft 4in

2875kg
6340lbs

4.40m
14ft 4in

200kg
440lbs

1.10m x 0.65m
3ft 7in x 2ft 2in

2.1kph
1.3mph

32%

100°

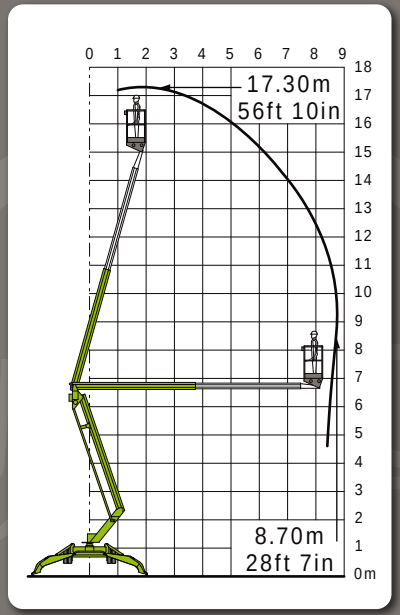

IPAF

CE

nqa.
ISO 9001
Registered

UKAS
QUALITY
MANAGEMENT
015

HIRE ASSOCIATION EUROPE
Hae
Member

1.  2. 

	90	120M	120H	120T	140	150T	170	210
1. (kN)	4.19	7.84	8.75	9.40	10.05	12.20	12.42	21.90
2. (kN/m²)	230	430	270	290	310	388	230	324

	SD120T	SD170	SD210	TD120TN	TD120T	TD150T	TD170
1. (kN)	14.48	17.50	25.16	11.12	12.07	13.24	18.10
2. (kN/m²)	446	324	368	343	372	420	335

1. 2.

	HR10	HR12N	HR12 2X4	HR12 4X4	HR15N	HR15 4X4	HR17N	HR17 4X4
1. (kN)	13.64	19.20	16.70	20.77	41.05	38.99	43.70	39.58
2. (kN/m²)	530	500	440	410	1207	1081	1284	1070

	HR17 Hybrid	HR18 4X4	HR21 2X4	HR21 4X4	HR21 Hybrid	SD120	SD170	SD210
1. (kN)	29.28	38.85	39.28	39.28	39.28	6.03	7.30	10.48
2. (kN/m²)	790	751	1088	1088	1088	9.90	7.85	9.52

nifty lift

ООО АЛТЕХ
ГРУППА КОМПАНИЙ
«АПЕКС»

+7 (495) 732-82-60
+7 (495) 231-24-01
info@apeks-msk.ru
www.apeks-msk.ru
г. Москва, ул. Электродная, д. 12, строение 1

АПЕКС®

ПОКОРИМ ВЫСОТУ ВМЕСТЕ